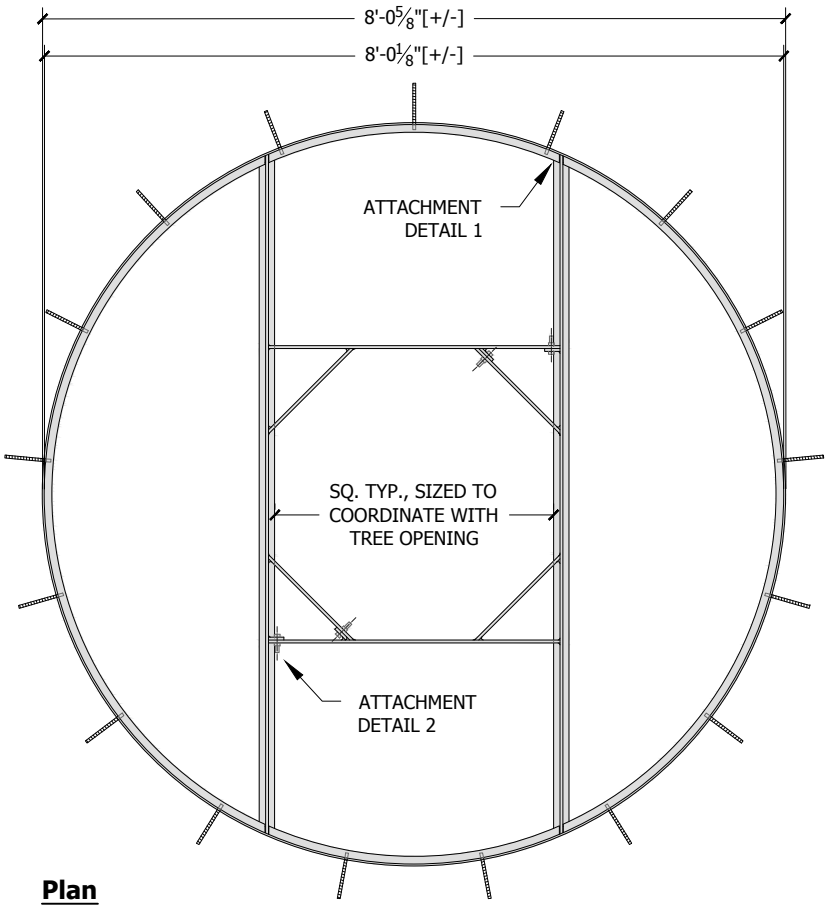

Plan

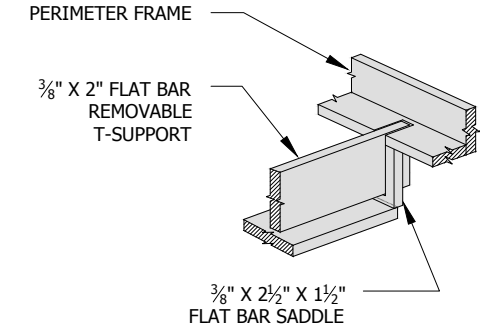

Detail 1

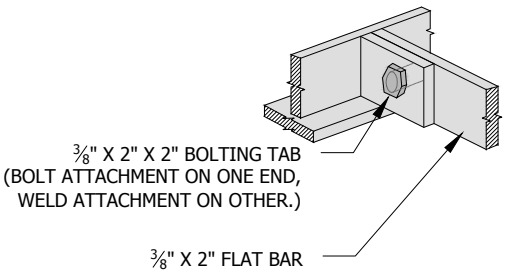

Detail 2

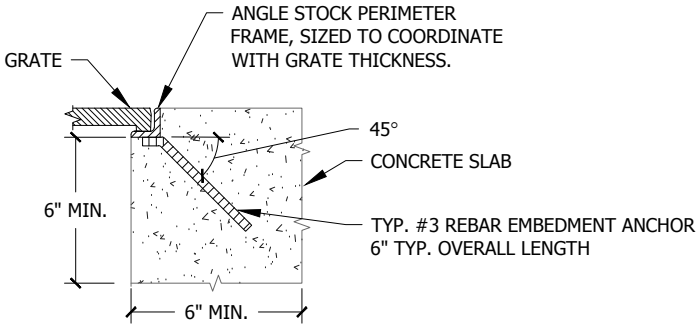

Elevation

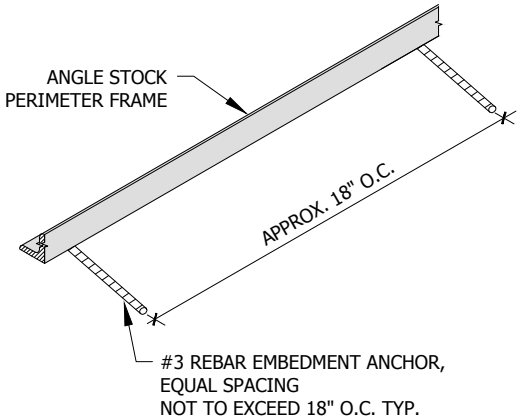

Isometric

SPECIFICATIONS

- Frames are constructed of mild steel ASTM A36 (unless specified otherwise; see below).

Material:
- □ Mild Steel ASTM A36 (standard)
- □ Stainless Steel grade 304L
- □ Architectural Bronze, ASTM B455
- □ Structural Aluminum, ASTM B221

- Finish will be natural patina of raw steel (unless specified otherwise; see below).

Finish:
- □ Raw (standard)
- □ Polyester Powder Coat*
- □ Liquid Coat (wet paint)*
  Color:
  *Please specify standard UC color or mfr. name and color code.
- □ Galvanized
- □ Other:

- Frame is load rated for pedestrian traffic only (unless specified otherwise; see below).

Load Classifications:
- □ Pedestrian (standard)
- □ Light Vehicular
- □ H20/HS20
  (Additional steel support may be added for optional load classes. Please contact UA for revised cut sheet, as necessary.)

- Typical 1/8" horizontal gap between grate and frame. All visible welds to be ground smooth on outside edges. Frames will be true to square or diameter. Top of grate flush with grade of surrounding topping material (paver, concrete slab, etc.).

- Dimensions are nominal.

Comments:

Tree Grate Frame

8' Rd. Type "S" Pedestrian Duty

Page: 1 of 1 Date: 4/16/12

URBAN ACCESSORIES
Founded 1972

465 E. FIFTEENTH ST. sales@urbanaccessories.com
TACOMA, WA 98421 www.urbanaccessories.com
(877) 487-0488